Platform
- carrying different goods

High flexibility and efficiency - the platform makes it easy to lift and carry goods, such as equipment with wheels or small trolleys. The platform can also be used for pallet handling.

The platform with quick shift system can easily and quickly be fitted on all Trans-Positioners and Trans-Stackers with straddle legs. Furthermore the platform can easily be replaced by one of the various fork options.

A wide range of optional extras ensures an optimum utilization of theTrans-Positioner and Trans-Stacker - the same unit can be fitted with spear, crane arm, drum turner and reel rotator.

High quality is ensured through an extended test program and in cooperation with experts in Health and Safety.

Technical Specifications

The platform also lifts and carries non-palletised goods
- equipment with wheels
- small trolleys
- high pressure cleaners
- vacuum cleaners

Facts about the platform
- max. capacity of 2200 lbs., when the load is distributed evenly
- width 43”
- length 39” or 48”

The platform has quick shift system and can easily and quickly be fitted on all TP and TS models with straddle legs.

Strong construction ensures a long operating life and low maintenance costs.

Quick shift system makes it easy to replace the platform with other optional extras or forks.

The platform being used carrying a vacuum cleaner.

Interthor offers a wide range of optional extras, e.g. crane arm, spear, reel rotator and drum turner.

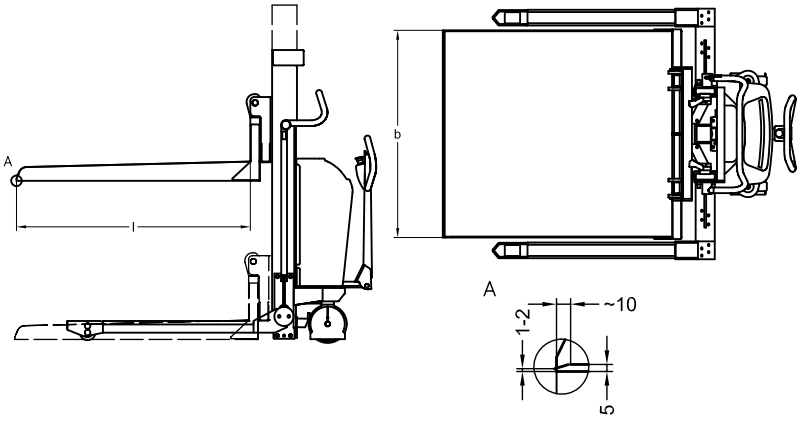

Product (measured in inch)		
Platform can be fitted on		TPS-MS, TPS-ME, TSS-MS, TSS-ME, TPS-EE, TSS-EE
Capacity		Max. capacity 2200 lbs. (when the load is distributed evenly)
Width of platform	b	43
Length of platform	l	39, 48

The platform being used carrying a high pressure cleaner.

The sloping edge ensures an easy entrance to the platform.

Remote control is available as an optional extra.

Trans-Stacker with platform lifting trolley from ramp.

The Interthor product range is available in all RAL-colours.

We also offer tailor-made solutions.
Please ask for further information or visit www.interthor.com